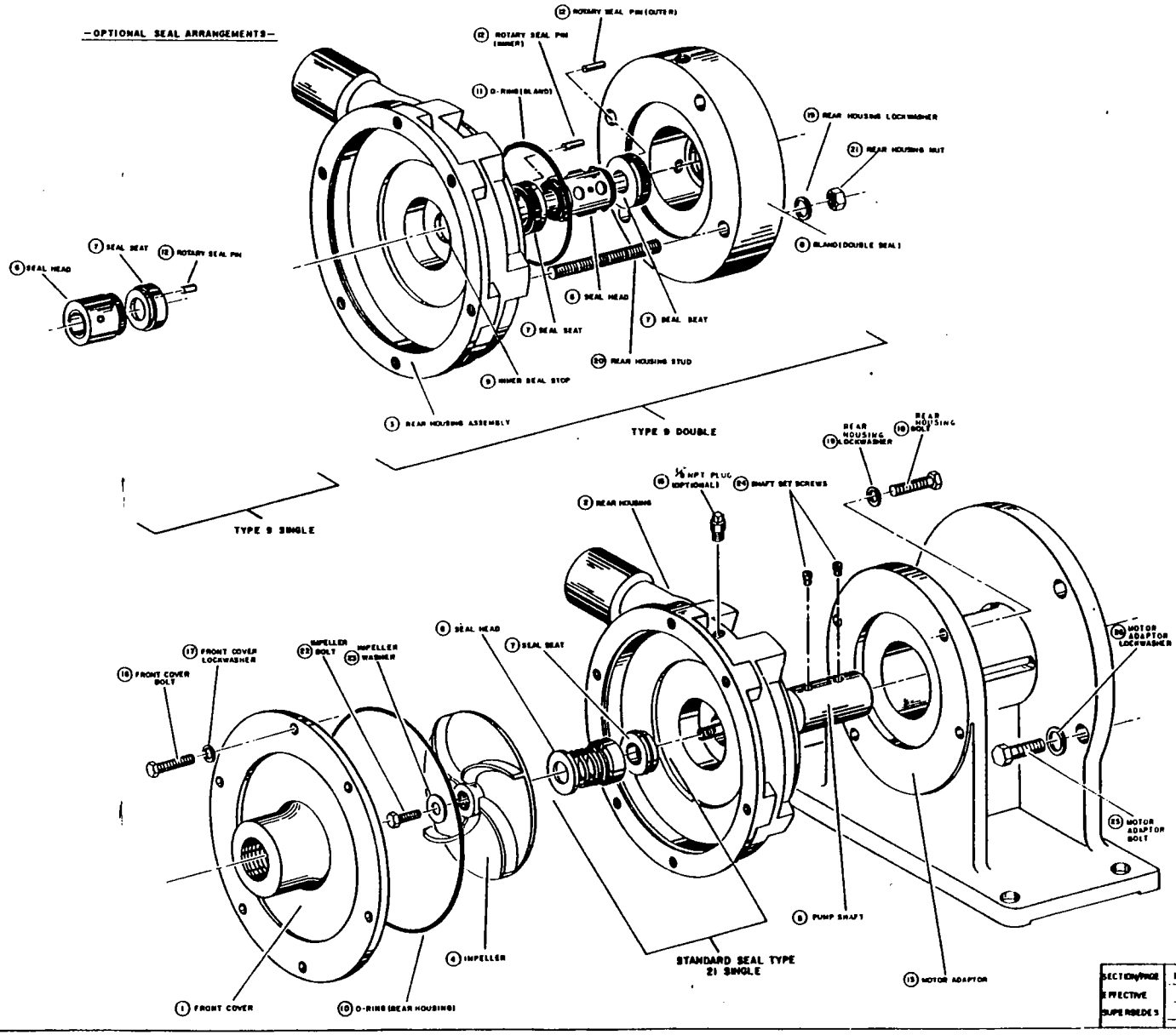

SECTION/PAGE	MODEL C /C500	
EFFECTIVE	01/01/93	
SUPERSEDES	10/15/86	

EASTERN | Pulsafeeder

CENTRICHEM® -C SERIES
PUMP EXPLODED VIEW

DWN BY: DJR
DATE: 7-30-86
DATE REV:

PLE 008